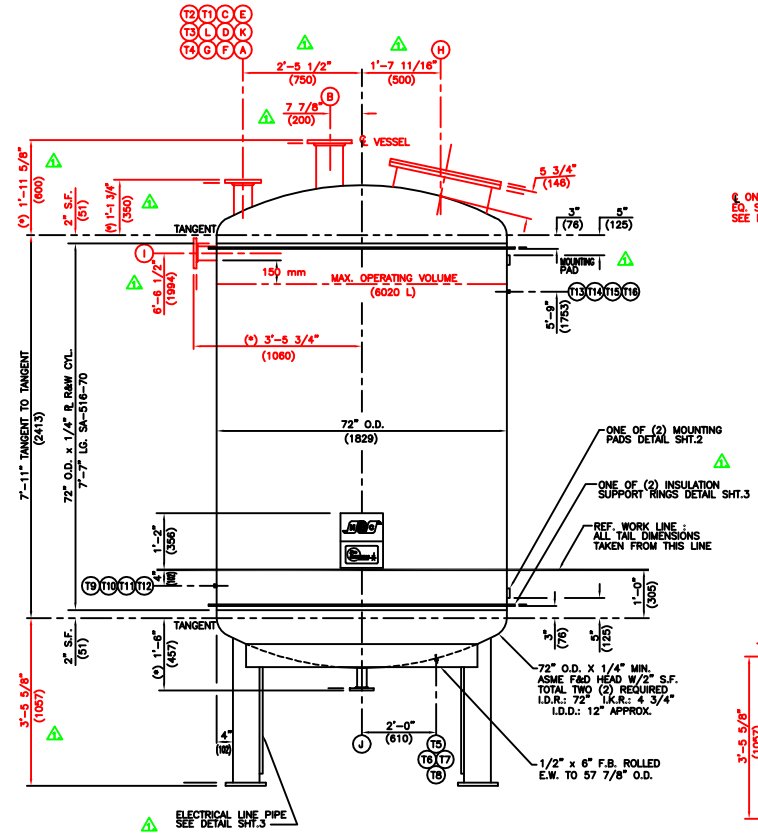

ELEVATION

SEE PLAN VIEW FOR TRUE ORIENTATION
* ALL DIMENSIONS MARKED (*) ARE STEEL TO STEEL

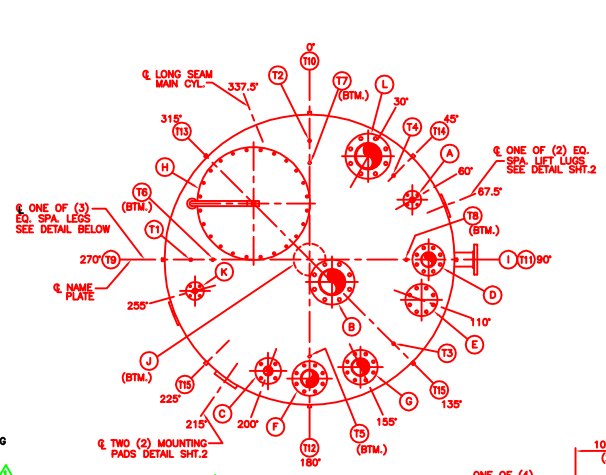

PLAN VIEW

TRUE ORIENTATION

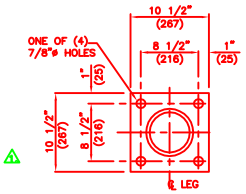

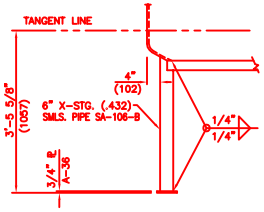

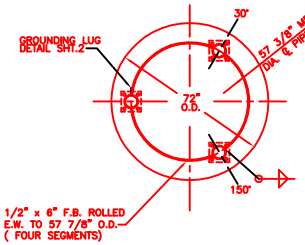

LEG DETAIL

THREE (3) REQUIRED

DESIGN CONDITIONS		SHELL	HEADS
DESIGN PRESS.	INTERNAL	25 PSIG. (1.75 BAR G)	
	EXTERNAL @ N/A (F)	N/A	
DESIGN TEMPERATURE		150° F (65.5° C)	
MAX ALLOW WORKING PRESS. @ 150° F		25 PSIG. (1.75 BAR G)	
MIN DESIGN METAL TEMP. @ 25 PSIG.		20° F. (-6.7° C)	
HYDROSTATIC TEST PRESS. (NEW & COLD)		38 PSIG (2.62 BAR G)	
CORROSION ALLOWANCE		0	
RADIOGRAPHY		SPOT	SMLS
DESIGN JOINT EFFICIENCY		85%	100%
HEAT TREATMENT		NOT REQUIRED	
INSULATION THICKNESS (BY OTHERS)		1 1/2"	
CAPACITY TOTAL 2000 GALLONS (7750 LITERS)		S.G. = 1.70	

MATERIAL SPECIFICATIONS (ASME)	VESSEL	INTERNALS
SHELL & REPADS	SA-516-70	~
HEADS	SA-516-70	~
SUPPORTS	SA-106-B / SA-36	~
CLIPS & LUGS	SA-36	~
FLANGES	SA-105 / SA-516-70	~
PIPE	SA-106-B	~
BOLTS/NUTS	SEE SCHEDULE	~
GASKETS	SEE SCHEDULE	~

GENERAL NOTES

1. ALL FLANGE BOLT HOLES SHALL STRADDLE NORMAL VESSEL CENTER-LINES UNLESS NOTED.
2. ALL WELDS SHALL BE NEAT IN APPEARANCE, FREE OF SLAG, DILLS, UNDERCUTS, AND OTHER DEFECTS.
3. VESSEL SHALL BE LEFT CLEAN AND DRY INSIDE AND FREE OF ALL FABRICATION DEBRIS.
4. P.W.I. TO FURNISH BOLTING AND N.G.C. TO FURNISH GASKETS FOR ALL BLIND FLANGES AND BODY FLANGES UNLESS NOTED (SEE SCHEDULE OF OPENINGS).
5. ALL NOZZLES TO BE FLUSH WITH INSIDE OF VESSEL.
6. ALL INTERNAL WELDS TO BE GROUND FLUSH.
7. ALL WETTED SURFACES LINED WITH 2mm GLASS BACKED TEFLON "FLUOROCLAD" (PTFE).
8. AFTER INSTALLATION, 100% OF LINING TO BE SPARK TESTED.
9. DIMENSIONS SHOWN IN PARENTHESIS ARE IN MILLIMETERS.

APPLICABLE STANDARDS AND SPECIFICATIONS : DWG. PID-66A

20100.OLN 20095.OLN FBPNT100.OLN

APPROVED WELDING PROCEDURE SPECIFICATIONS (WPS's)

P1 TO P1: WPS-PRO-17(GMAW), WPS-PRO-30(GTAW), WPS-PRO-37(FCAW), WPS-PRO-56(SMAW), WPS-PRO-86(SAW)

P1 TO P8: WPS-PRO-34(GMAW)

CERTIFIED BY
PRO-FORMANCE WELDING, INC.
HOUSTON, TEXAS

W RT-4

MAWP 25 PSI. @ 150 °F.
MIN DESIGN METAL TEMP. 20 °F.@ 25 PSI.
MFR'S SERIAL NO. 6513 YEAR BUILT 1997
ITEM No. V6601 WT. EMPTY 4,000 LBS.
TEST PRESS. 38 PSI. SA-516-70
P.O. No.: (NGC) N055717 / (OLIN) 962105/000
MAWP : 1.75 BAR G @ 65.5° C
PLANT SITE : ZWIJNDRECHT, BELGIUM
PTFE LINED VESSEL---DO NOT WELD OR BURN
SERVICE: ME BLEND TANK

PRO-FORMANCE CODE NAME PLATE (T-310 STAINLESS STEEL) NAME PLATE TO BE INSTALLED ON 1/4" STNLS. STEEL U-BRACKET. U-BRACKET TO HAVE 3" STAND OFF.

PAINTING REQUIRMENTS: PER SPEC. 20095.OLN AND SURFACE PREP. PER SPEC. FBPNT100.OLN (BY N.G.C.)

DESIGNED & CONST. IN ACCORD. WITH: ASME SECT. VIII DIV.1 1995 (A95)
STAMP: REQUIRED | N.B. REGIS: NOT REQ'D | INSPECTION BY: A.I. & CUST.
WEIGHTS, LBS: FAB'D. 4,000 OPERATING: 32,500 TEST: 21,000
CUSTOMER: N.G.C. / OLIN | P.O. No.: N05717
CUSTOMER DWG. No.: PID-66A | ITEM No.: V6601
PROJECT: OLIN / BELGIUM | SITE: ZWIJNDRECHT, BELGIUM
SERVICE: ME BLEND TANK | ONE (1) UNIT REQ'D.

FLUOROCLAD LINING SYSTEM

NISSHIN GULF COAST, INC.
1701 TIDWELL HOUSTON, TEXAS 77093

LINING: 2mm (0.080") FLUOROCLAD PTFE
MAE BLEND TANK
MAX. CAPACITY 2000 GALLONS (7750 LITERS)
N.G.C. PROJECT No. : 2190

(DO NOT USE SERVICE BOLTING FOR HYDROTEST)

MARK	QUAN	SIZE	RTG	QUANTITY	MATERIAL	No.	DIA.	LENGTH	MATERIAL	REMARKS
H	24"	30	1	26 1/8" x 24 1/2" x 1/8" KLINGER C-4401 (HYDRO)		24	1/2"	3 1/2"	SA-193-B7	TEFLON COATED
E	80	PN10	1	1/8" KLINGER C-4401 (HYDRO)		8	5/8"	3 3/4"	SA-193-B7	TEFLON COATED

FLANGE DESCRIPTION | GASKET DESCRIPTION | BOLTING DESCRIPTION- ALL STUDS TO HAVE (2) HEAVY HEX NUTS EA. SA-194-2H

GASKET & BOLTING SCHEDULE

MARK	QUAN	DIA	PN	FLANGE RTG	FLANGE TYPE	SERVICE	DIA	SCH	THK	PIPE CUT LNTH	NECK INT PROJ	NOZ EXT.	NOZ INT.	WIDTH	THK	REIN PAD	FLY	BLIND FLANGE	REMARKS
T	16	1/4"	3000	HALF-THRD		TEST HOLE	~	~			~	1/4"	~	~	~	~		PLUG	
H	1	24"	30	FF	SO	MANWAY	STD.	.375			~	1/4"	~	~	~	~		YES	W/ DAVIT
L	1	150	10	FF	SO	POWDER INLET	6"	40	.280		FLUSH	1/4"	~	~	~	~	~		
K	1	25	10	FF	SO	DOSING INLET	1"	40	.133		FLUSH	1/4"	~	~	~	~	~		
J	1	50	10	FF	SO	OUTLET	2"	40	.154		FLUSH	1/4"	~	~	~	~	~		
I	1	80	10	FF	SO	OVERFLOW	3"	40	.216		FLUSH	1/4"	~	~	~	~	~		
G	1	100	10	FF	SO	EDUCTOR INLET	4"	40	.237		FLUSH	1/4"	~	~	~	~	~		
F	1	100	10	FF	SO	MIXER OUTLET	4"	40	.237		FLUSH	1/4"	~	~	~	~	~		
E	1	80	10	FF	SO	SPARE	3"	40	.216		FLUSH	1/4"	~	~	~	~	~	YES	
D	1	80	10	FF	SO	DI WATER INLET	3"	40	.216		FLUSH	1/4"	~	~	~	~	~		
C	1	50	10	FF	SO	HF/HNO3 INLET	2"	40	.154		FLUSH	1/4"	~	~	~	~	~		
B	1	150	10	FF	SO	SONIC PROBE	6"	40	.280		FLUSH	1/4"	~	~	~	~	~		
A	1	25	10	FF	SO	AIR	1"	40	.133		FLUSH	1/4"	~	~	~	~	~		

ABOVE ARE "RFF" FLANGES

SCHEDULE OF OPENINGS

GENERAL VESSEL ARRANGEMENT

FABRICATED FOR: NISSHIN GULF COAST, HOUSTON, TEXAS.
FABRICATED BY: Pro Formance Welding, Inc., HOUSTON, TEXAS.

PARTNERS IN QUALITY

REVISIONS
1 REVISED PER CLIENT COMMENT 02-03-97
2
3
4
5
6

SCALE NOT TO SCALE

DRWN	MTM	12/20/96
CHKD	GLS	12/20/96
APPD		12/20/96

DRAWING No. : 121296D | SHEET No. : 1 of 3 | REVISION No. 1

REF. NGC 96-2190-GF-1